# EE352 Automatic Control

Dr. Lilantha Samaranayake

Department of Electrical and Electronic Engineering
University of Peradeniya
Deep Vision, Bright Future

# Block Diagram Algebra

- In Control Systems, the signal flow relationships are usually represented using block diagrams.
- They obey additive and multiplicative laws of linear algebra.
- Block Diagram Algebra is useful to reduce complicated systems in to simpler systems which may be easier to analyze.

# Laws of Block Diagram Algebra

- Combining blocks in series cascade.

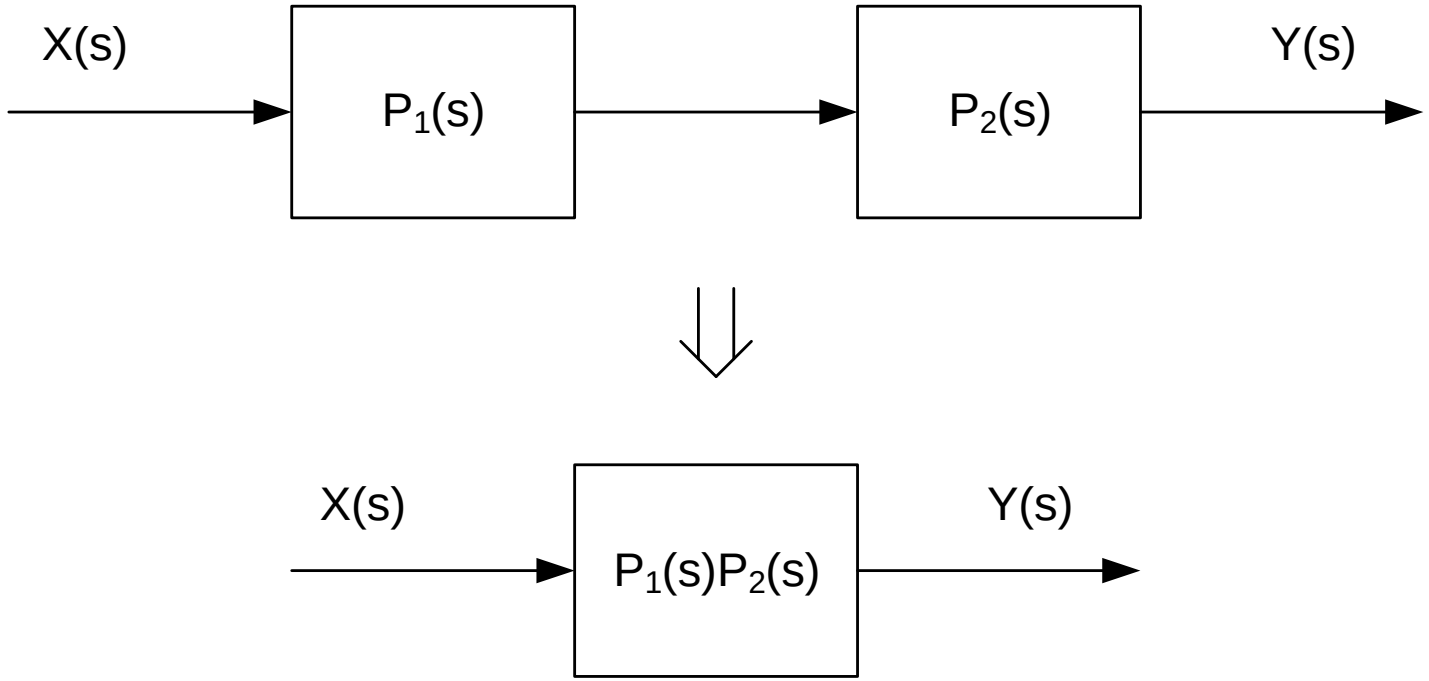


Department of Electrical and Electronic Engineering
University of Peradeniya
Deep Vision, Bright Future

# Laws of Block Diagram Algebra contd.,

- Combining blocks in parallel cascade.

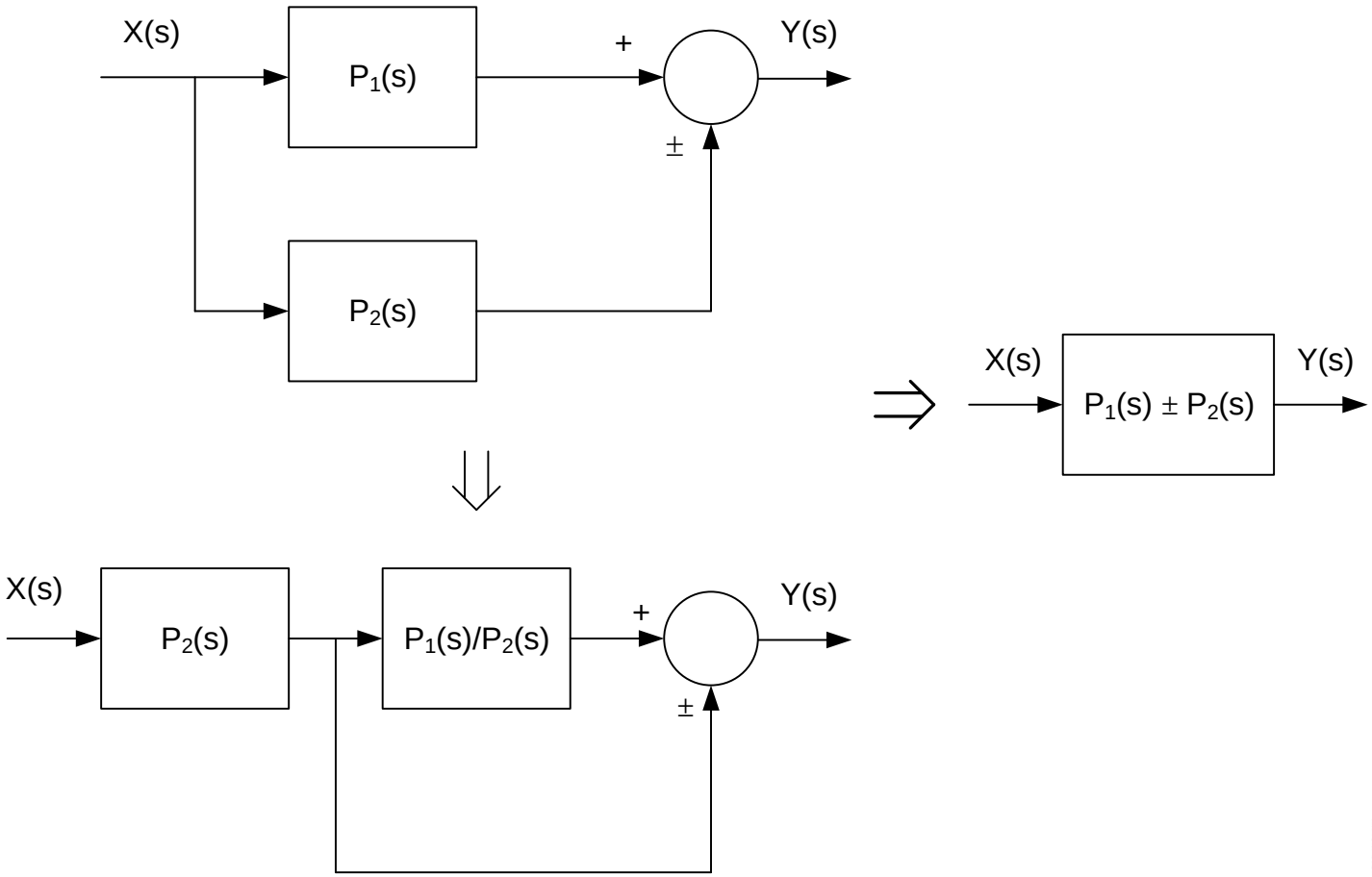


Department of Electrical and Electronic Engineering
University of Peradeniya
Deep Vision, Bright Future

# Sensing operation

- Examples of physical components involving in the sensing operation are:
  - Potentiometers
  - Resolvers (a very accurate encoder)
  - Tacho generators
  - etc.
- Differential Amplifiers, Multipliers and other signal processing transducers generally perform addition and subtraction, which are linear operations and multiplication which is a non linear operation or a combination of them, of the sensed signals.
- Since addition and subtraction are linear operations, the input and output variables of the block diagram elements can be
  - time domain variables or
  - Laplace transform variables.
- Hence a complete feedback control system consists of the following components:

# Components of a complete feedback control system

$r(t), R(s)$ - Reference input signal

$y(t), Y(s)$ - Output signal

$b(t), B(s)$ - Feedback signal

$u(t), U(s)$ - Actuating signal

$H(s)$ - Feedback transfer function

$G(s)$ - Forword transfer function

$L(s) = G(s)H(s)$ - Loop transfer function

$M(s) = \frac{G(s)}{1+G(s)H(s)}$ - Closed loop transfer function

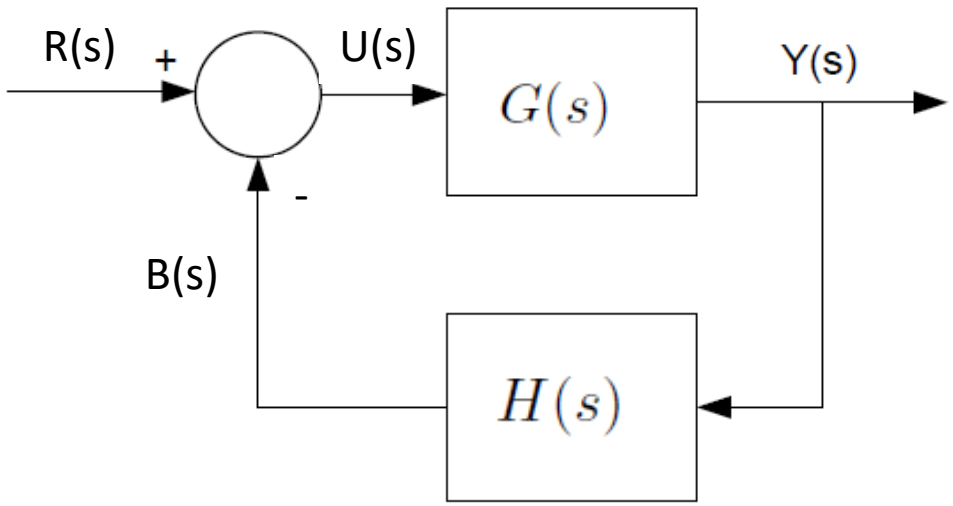


$\Downarrow$

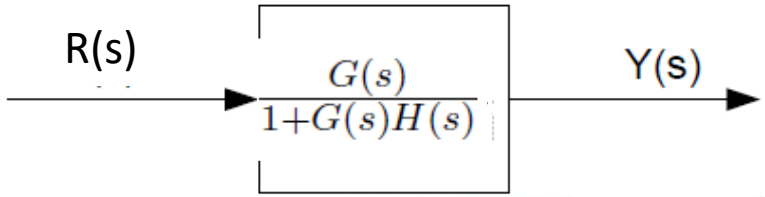


Department of Electrical and Electronic Engineering
University of Peradeniya
Deep Vision, Bright Future

# Block Diagram Algebra contd.,

- Removing a block from feedback

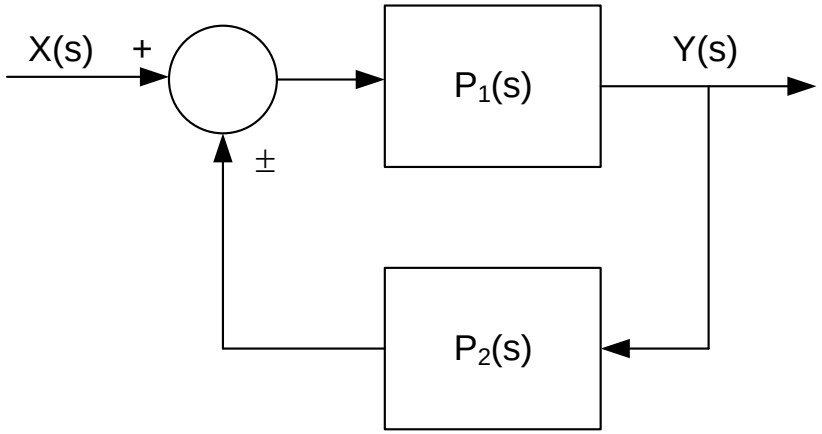


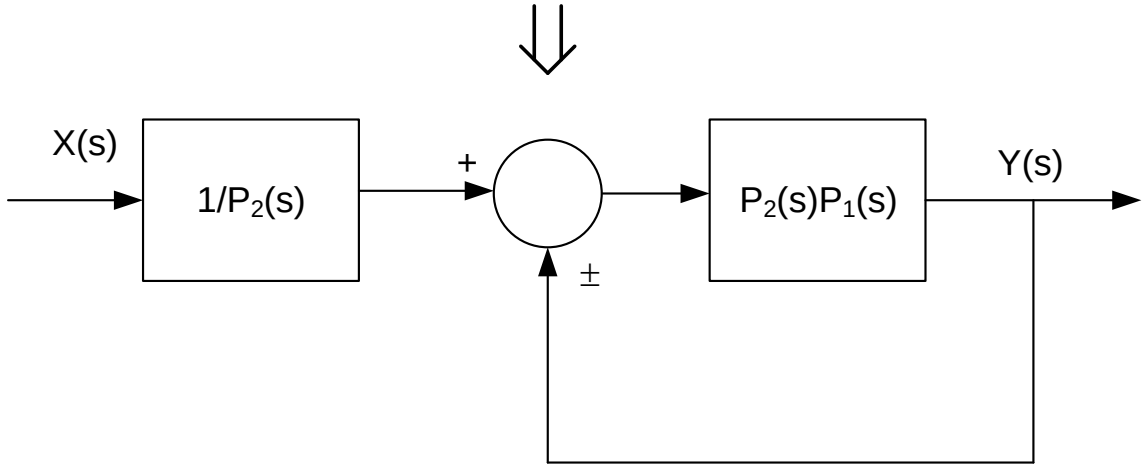


Department of Electrical and Electronic Engineering
University of Peradeniya
Deep Vision, Bright Future

# Block Diagram Algebra contd.,

- Rearranging summing points

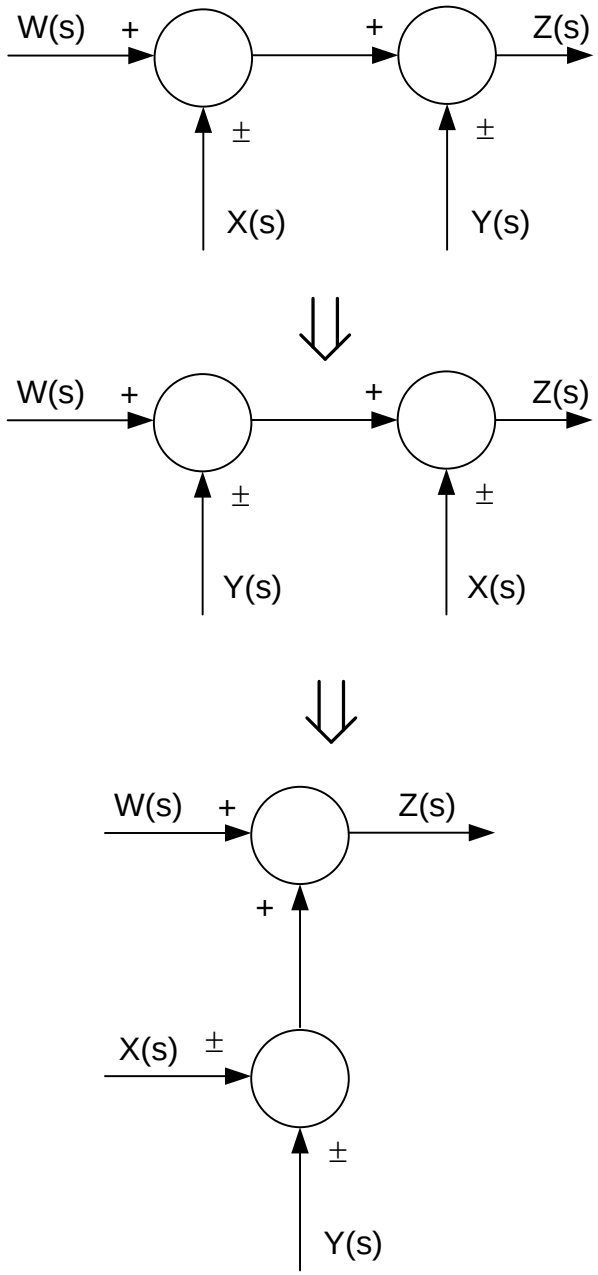


Department of Electrical and Electronic Engineering
University of Peradeniya
Deep Vision, Bright Future

# Block Diagram Algebra contd.,

- Moving the summing point ahead of the block

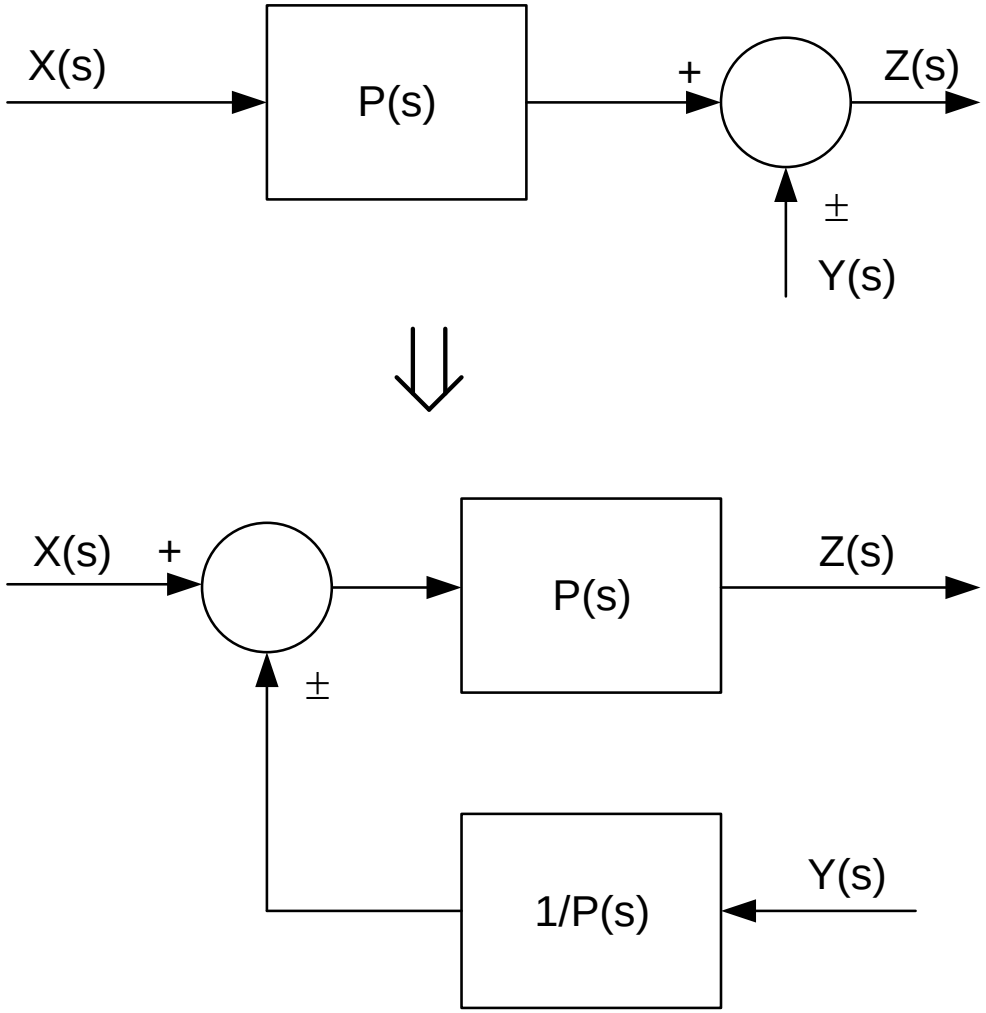


Department of Electrical and Electronic Engineering
University of Peradeniya
Deep Vision, Bright Future

# Block Diagram Algebra contd.,

- Moving the summing point beyond the block

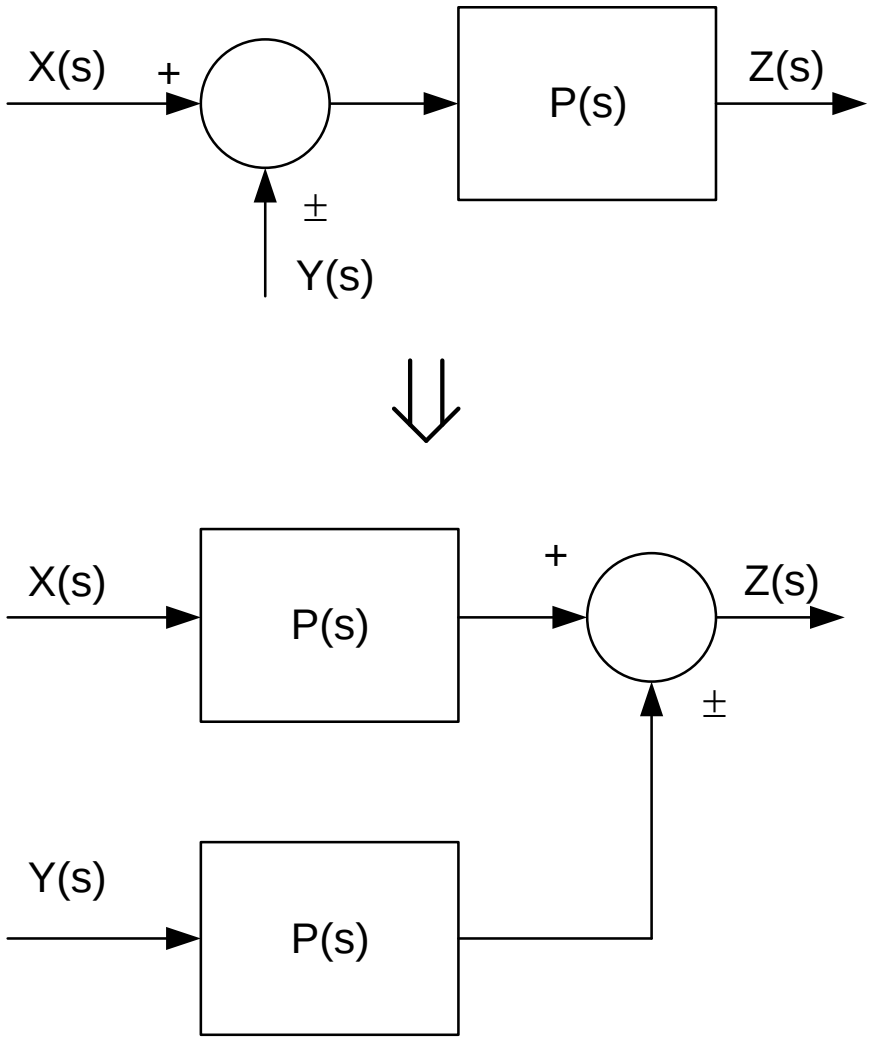


Department of Electrical and
Electronic Engineering
University of Peradeniya
Deep Vision, Bright Future

# Block Diagram Algebra contd.,

- Moving the take-off point ahead of the block

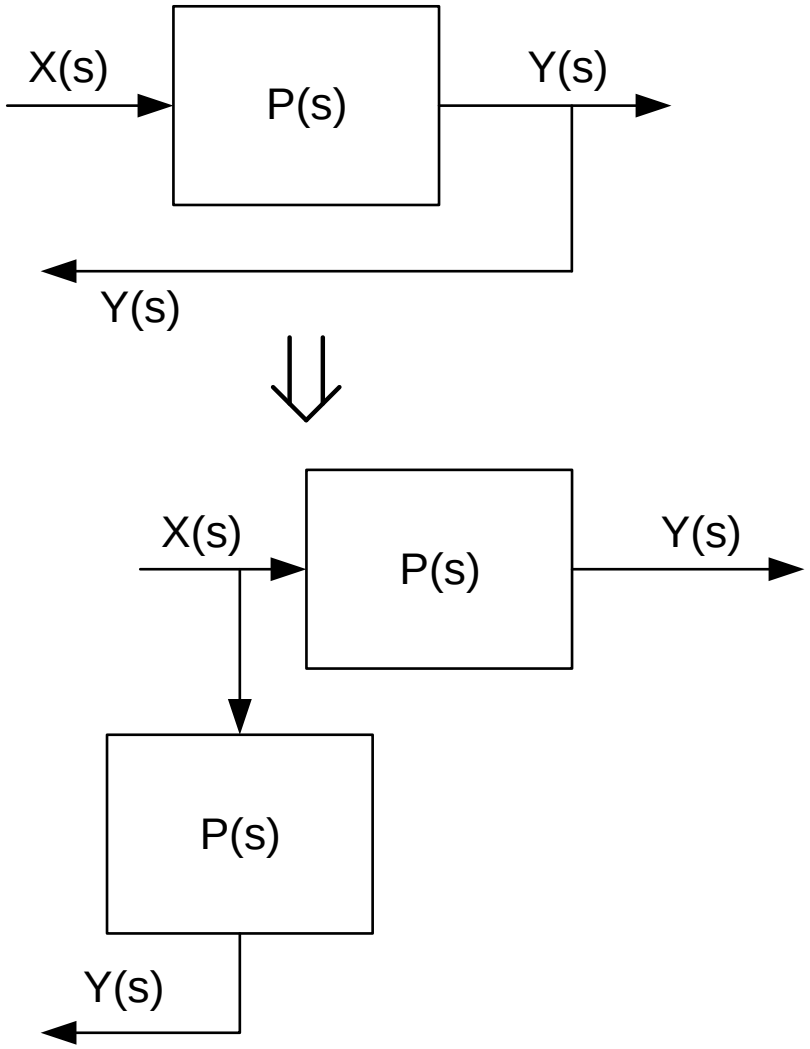


Department of Electrical and Electronic Engineering
University of Peradeniya
Deep Vision, Bright Future

# Block Diagram Algebra contd.,

- Moving the take-off point beyond the block

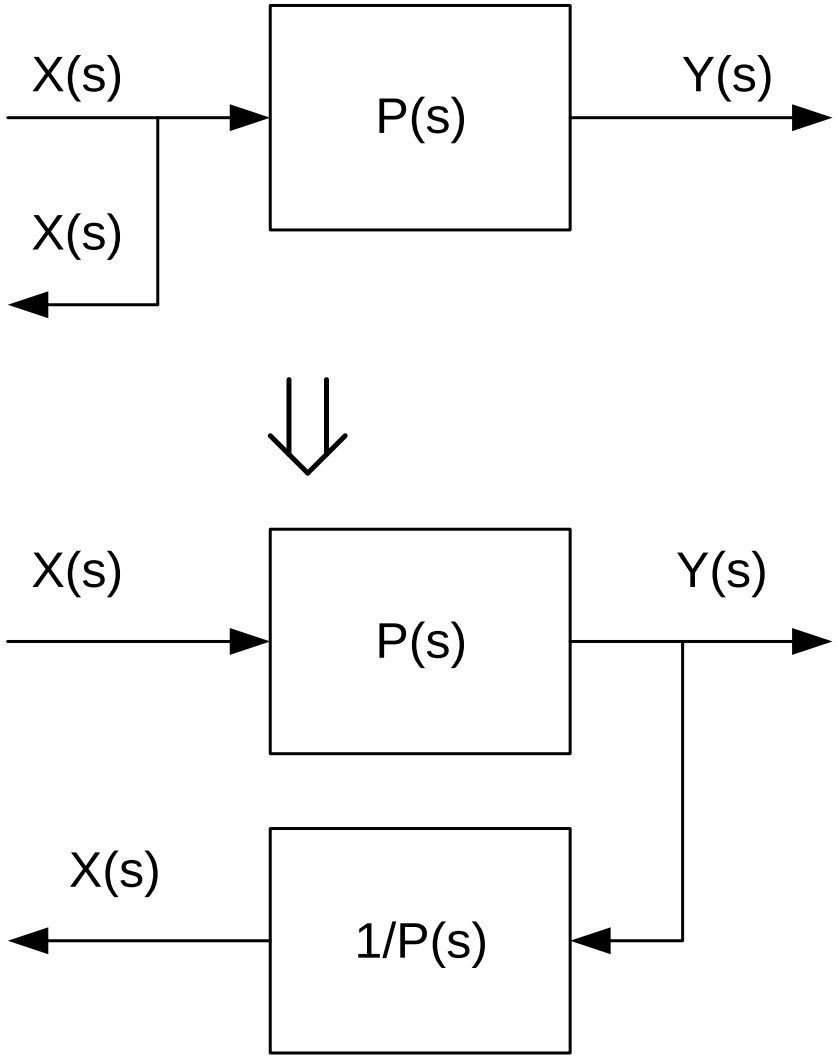


Department of Electrical and
Electronic Engineering
University of Peradeniya
Deep Vision, Bright Future

# Block Diagram Algebra contd.,

- Moving the take-off point ahead of the summing point

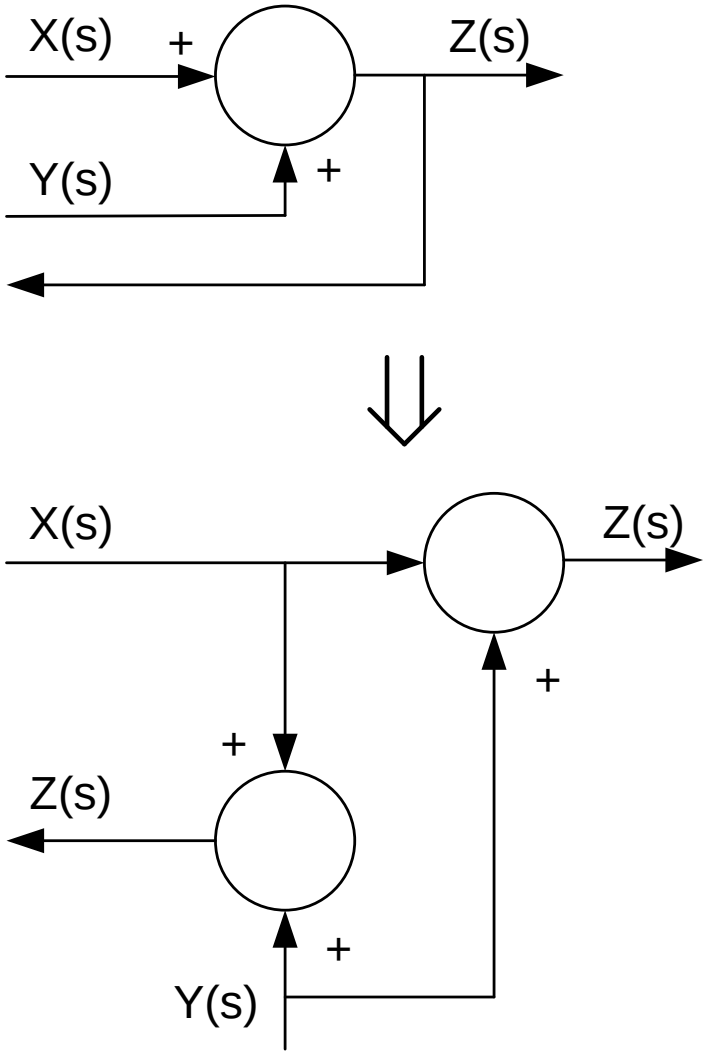


Department of Electrical and
Electronic Engineering
University of Peradeniya
Deep Vision, Bright Future

# Block Diagram Algebra contd.,

- Moving the take-off point beyond the summing point

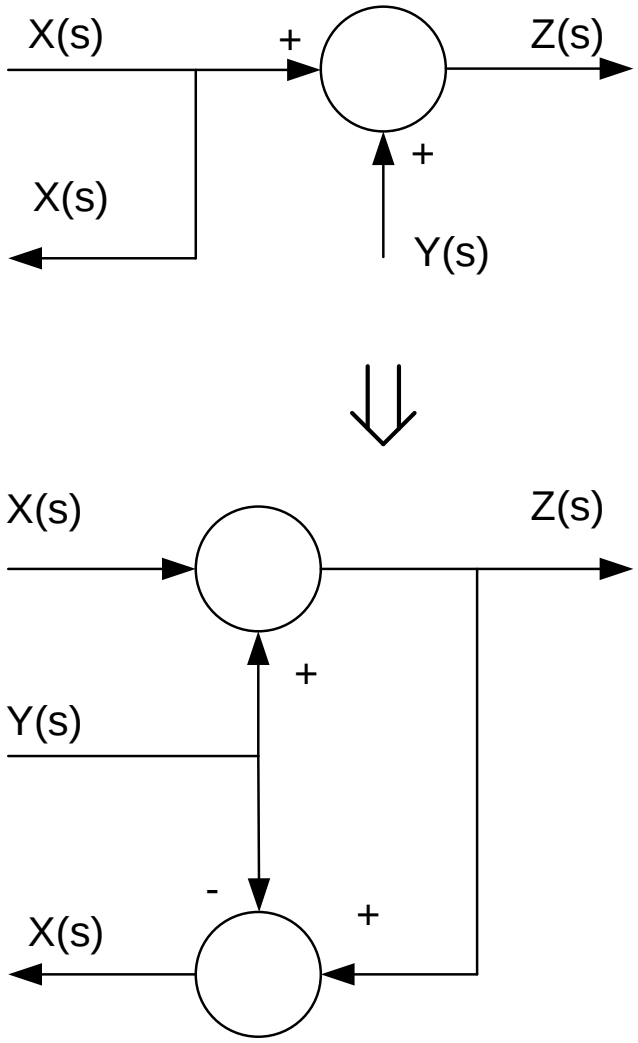


Department of Electrical and Electronic Engineering
University of Peradeniya
Deep Vision, Bright Future

# Block Diagram Algebra contd.,

- Addition and subtraction linear operations

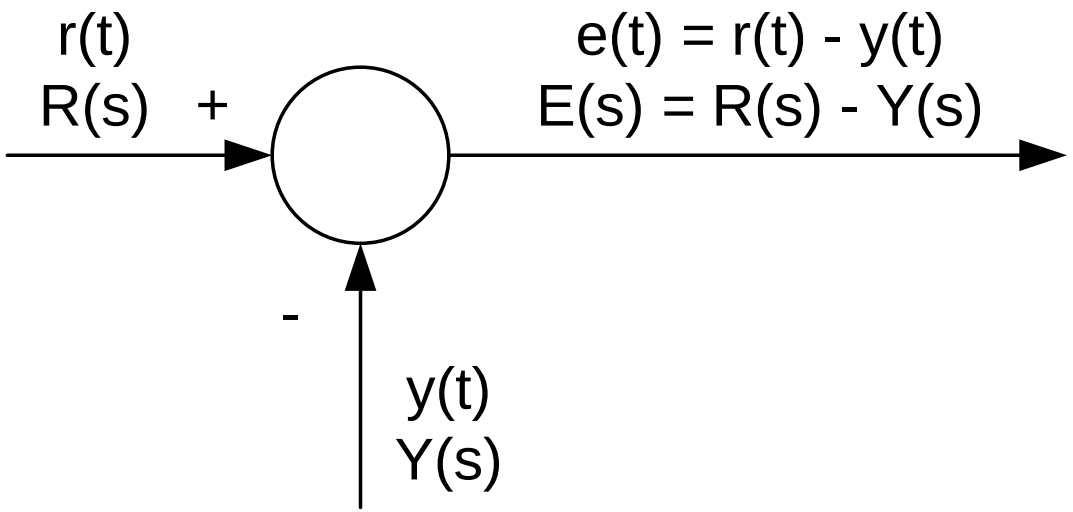


Department of Electrical and
Electronic Engineering
University of Peradeniya
Deep Vision, Bright Future

# Block Diagram Algebra contd.,

- Feedback control system

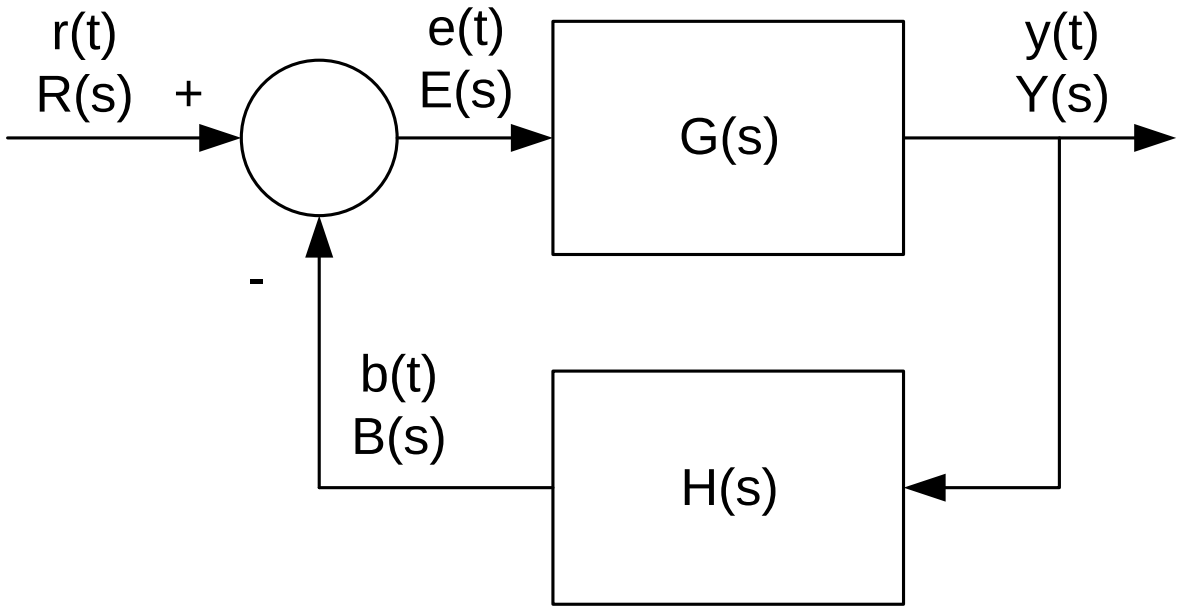


Department of Electrical and
Electronic Engineering
University of Peradeniya
Deep Vision, Bright Future